ASS'Y PROC. A

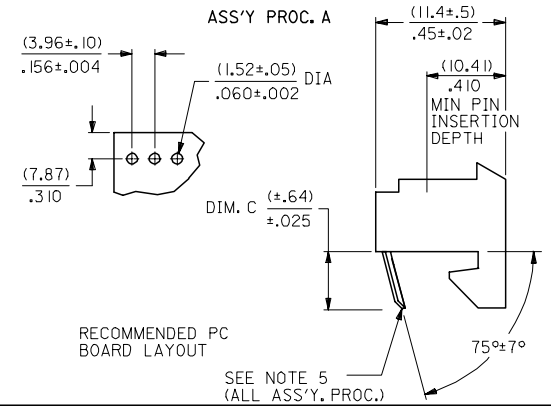

ASS'Y PROC. C

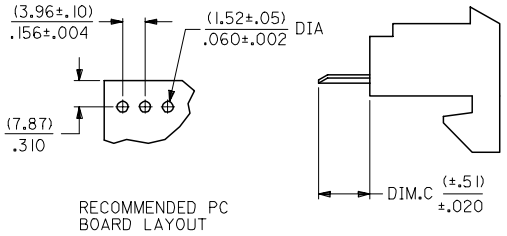

ASS'Y PROC. D

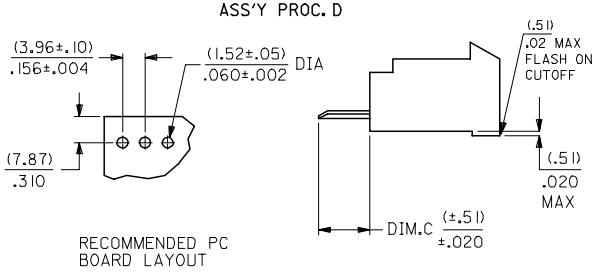

ASS'Y. PROC. E
SEE NOTE 7

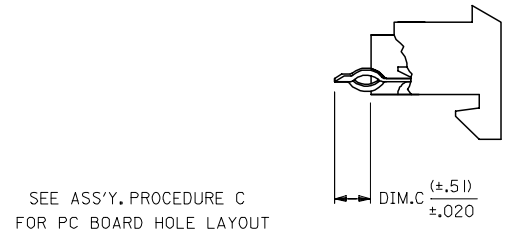

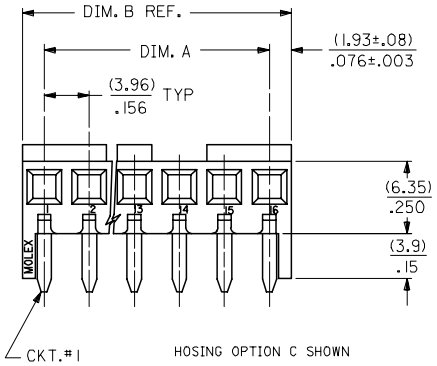

HOSING OPTION C SHOWN

NOTES:

1. TERMINALS MUST CONFORM TO SOLDERABILITY SPEC. ES-152.
2. PARTS CONFORM TO PRODUCT SPEC 08-50.
3. HOUSING MATERIAL: NYLON, UL LISTED
5. TERMINAL TAIL CENTERLINES ARE TO BE WITHIN (.30)/.012 OF EACH OTHER.
6. TERMINAL PULL OUT FORCE: 4 LBS MIN.
7. SEE SMES-42329-*** FOR KINK PIN INFORMATION.
8. FINISH: SEE SDES-88
   (909) *OVERALL HOT TIN DIP: .00254 MICROMETERS MIN
   (228) SELECT GOLD: .00076 MICROMETERS MIN,
   *SELECT IN: .00254 MICROMETERS MIN,
   OVERALL NICKEL UNDERPLATE: .00127 MICROMETERS MIN.
   *THE PRIMARY SHIPPING CARTON WILL BE LABELED "COMPLIANT TO RoHS DIRECTIVE 2002/95/EC AND ELV ANNEX II OF DIRECTIVE 2000/53/EC". CARTONS WITHOUT THIS LABEL MAY CONTAIN PRODUCT WITH TIN/LEAD PLATINGS.

A-6365- * * N * * * - *

VOID LOCATION

PACKAGING CODE
BLANK = PER PK-6365-001

PLATING

ASS'Y. PROC.
A=RIGHT ANGLE
C=TOP ENTRY
D=TOP ENTRY WITH HOOKS CUT OFF
E=TOP ENTRY WITH KINKED PINS

HOUSING NO.
A=6365-N
HOOKS & FLUX SHIELD
B=6365-AN
HOOKS
C=6365-BN
HOOKS & RAMP
D=6365-NBK
HOOKS,FLUX SHIELD,DYED

TERMINAL NO.
A=6441-B-1(*), BRASS
B=6441-B-2(*), BRASS
C=6441-C-1(*), PHOS BRONZE

NO. OF CKTS.

NO. OF CKTS.	DIM. A	DIM. B
1		(3.86) .152
2	(3.96 ± .13) .156 ± .005	(7.82) .308
3	(7.92 ± .13) .312 ± .005	(11.79) .464
4	(11.89 ± .13) .468 ± .005	(15.75) .620
5	(15.85 ± .13) .624 ± .005	(19.71) .776
6	(19.81 ± .13) .780 ± .005	(23.67) .932
7	(23.77 ± .25) .936 ± .010	(27.64) 1.088
8	(27.74 ± .25) 1.092 ± .010	(31.60) 1.244
9	(31.70 ± .25) 1.248 ± .010	(35.56) 1.400
10	(35.66 ± .25) 1.404 ± .010	(39.52) 1.556
11	(39.62 ± .25) 1.560 ± .010	(43.48) 1.712
12	(43.59 ± .25) 1.716 ± .010	(47.45) 1.868
13	(47.55 ± .25) 1.872 ± .010	(51.41) 2.024
14	(51.51 ± .36) 2.028 ± .014	(55.37) 2.180
15	(55.47 ± .36) 2.184 ± .014	(59.33) 2.336

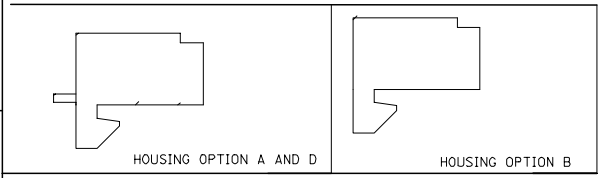

ENTER DESCRIPTION
EC NO: UCP2005-1551 2005/01/27
DRWN:KSAMIEC 2005/01/27
CHKD: 2005/01/31
APPR:YMARGULI
DESCRIPTION
AB1
REV

QUALITY SYMBOLS
▼=0
Ⓒ=0

GENERAL TOLERANCES (UNLESS SPECIFIED)

	mm	INCH
4 PLACES	± ---	± ---
3 PLACES	± ---	± .010
2 PLACES	± 0.25	± .014
1 PLACE	± 0.36	± ---
ANGULAR ±1/2°		

DRAFT WHERE APPLICABLE MUST REMAIN WITHIN DIMENSIONS

DIMENSION STYLE: IN/MM
SCALE: 1:1
DESIGN UNITS: INCH
THIRD ANGLE PROJECTION

DRAWN BY: GUZIK DATE: 12/10/87
CHECKED BY: PATEL DATE: 12/10/87
APPROVED BY: LENZ DATE: 12/10/87

TITLE: P.C. TAIL HOUSING ASSEMBLY .156 CL

molex MOLEX INCORPORATED

MATERIAL NO.: ENTER PART
DOCUMENT NO.: SDA-6365
SHEET NO.: 1 OF 00
SIZE: C

THIS DRAWING CONTAINS INFORMATION THAT IS PROPRIETARY TO MOLEX INCORPORATED AND SHOULD NOT BE USED WITHOUT WRITTEN PERMISSION

ENG. NO.	HOUSING NO.	TERMINAL NO.	DIM. C	EDP ON SHT. / COL.
A-6365-ABNA(P909)-*	6365-AN-*	6441-B-1(P909)C	(3.94) / .155	3 / 1
A-6365-CBNA(P909)-*	6365-AN-*	6441-B-1(P909)C	(3.18) / .125	3 / 2
A-6365-AANA(P909)-*	6365-N-*	6441-B-1(P909)C	(3.94) / .155	3 / 3
A-6365-ACNA(P909)-*	6365-BN-*	6441-B-1(P909)C	(3.94) / .155	3 / 4
A-6365-ADNA(P909)-*	6365-NBK-*	6441-B-1(P909)C	(3.94) / .155	4 / 1
A-6365-ABNA(102)-*	6365-AN-*	6441-B-1(102)C	(3.94) / .155	4 / 2
A-6365-AANA(102)-*	6365-N-*	6441-B-1(102)C	(3.94) / .155	4 / 3
A-6365-ACNA(P228)-*	6365-BN-*	6441-B-1(P228)C	(3.94) / .155	4 / 4
A-6365-CBNA(P228)-*	6365-AN-*	6441-B-1(P228)C	(3.18) / .125	5 / 1
A-6365-DBNA(P909)-*	6365-AN-*	6441-B-1(P909)C	(3.18) / .125	5 / 2
A-6365-CBNB(P909)-*	6365-AN-*	6441-B-2(P909)C	(4.50) / .177	5 / 3
A-6365-AANC(501)-*	6365-N-*	6441-C-1(501)C	(4.42) / .174	5 / 4
A-6365-CCNC(501)-*	6365-BN-*	6441-C-1(501)C	(3.18) / .125	6 / 1
A-6365-ABNC(P909)-*	6365-AN-*	6441-C-1(P909)C	(4.42) / .174	6 / 2
A-6365-CBNA(501)-*	6365-AN-*	6441-B-1(501)C	(3.18) / .125	6 / 3
A-6365-DBNA(501)-*	6365-AN-*	6441-B-1(501)C	(3.18) / .125	6 / 4
A-6365-CCNC(P909)-*	6365-BN-*	6441-C-1(P909)C	(3.18) / .125	7 / 1
A-6365-CCNA(P909)-*	6365-BN-*	6441-B-1(P909)C	(3.18) / .125	7 / 2

LTR.	REVISIONS	LTR.	REVISIONS
		AB	SEE SHEET 1
		AA11	SEE SHEET 1

DIMENSIONS SHOWN (METRIC) INCH
UNLESS OTHERWISE SPECIFIED TOLERANCES: ANGULAR ± 1/2°

	INCH	METRIC
3 PLACE	±	
2 PLACE	±	±
1 PLACE		±

DRAFT WHERE APPLICABLE MUST REMAIN WITHIN DIMENSIONS

DRWG. BY GUZIK — CHK'D. BY PATEL
APP'D. BY LENZ — SCALE :

REVISE ONLY ON CAD SYSTEM

TITLE: HOUSING ASS'Y P.C.TAIL (3.96)/.156 ℄ TRIFURCON ASSEMBLY

MOLEX INCORPORATED LISLE, ILL. 60532 U.S.A.

SHEET NO. 2 — DATE 12/10/87

PART NO. SEE CHART — DRWG. NO. SDA-6365

FILE NAME S6365X2

THIS DRAWING CONTAINS INFORMATION THAT IS PROPRIETARY TO MOLEX INC. AND SHOULD NOT BE USED WITHOUT WRITTEN PERMISSION.

DIV. KK — SIZE C

6365

A-6365-CCNC(501)-*			A-6365-ABNC(P909)-*			A-6365-CBNA(501)-*			A-6365-DBNA(501)-*		
PART NO.	ENG. NO (SUFFIX ONLY)	VOID CKT.	PART NO.	ENG. NO (SUFFIX ONLY)	VOID CKT.	PART NO.	ENG. NO (SUFFIX ONLY)	VOID CKT.	PART NO.	ENG. NO (SUFFIX ONLY)	VOID CKT.
				-AB01C(P909)			-CB01A(501)			-DB01A(501)	
26-29-2021	-CC2C(501)		26-16-6029	-AB02C(P909)		022-10-7022	-CB02A(501)		022-10-7023	-DB02A(501)	
26-29-2031	-CC3C(501)		26-16-6039	-AB03C(P909)		022-10-7032	-CB03A(501)		022-10-7033	-DB03A(501)	
26-29-2041	-CC4C(501)		26-16-6049	-AB04C(P909)		022-10-7042	-CB04A(501)		022-10-7043	-DB04A(501)	
26-29-2051	-CC5C(501)		26-16-6059	-AB05C(P909)		022-10-7052	-CB05A(501)		022-10-7053	-DB05A(501)	
26-29-2061	-CC6C(501)		26-16-6069	-AB06C(P909)		022-10-7062	-CB06A(501)		022-10-7063	-DB06A(501)	
26-29-2071	-CC7C(501)		26-16-6079	-AB07C(P909)		022-10-7072	-CB07A(501)		022-10-7073	-DB07A(501)	
26-29-2081	-CC8C(501)		26-16-6089	-AB08C(P909)		022-10-7082	-CB08A(501)		022-10-7083	-DB08A(501)	
26-29-2091	-CC9C(501)		26-16-6099	-AB09C(P909)		022-10-7092	-CB09A(501)		022-10-7093	-DB09A(501)	
26-29-2101	-CC10C(501)		26-16-6109	-AB10C(P909)		022-10-7102	-CB10A(501)		022-10-7103	-DB10A(501)	
26-29-2111	-CC11C(501)		26-16-6119	-AB11C(P909)		022-10-7112	-CB11A(501)		022-10-7113	-DB11A(501)	
26-29-2121	-CC12C(501)		26-16-6129	-AB12C(P909)		022-10-7122	-CB12A(501)		022-10-7123	-DB12A(501)	
26-29-2131	-CC13C(501)		26-16-6139	-AB13C(P909)		022-10-7132	-CB13A(501)		022-10-7133	-DB13A(501)	
26-29-2141	-CC14C(501)		26-16-6149	-AB14C(P909)		022-10-7142	-CB14A(501)		022-10-7143	-DB14A(501)	
26-29-2151	-CC15C(501)		26-16-6159	-AB15C(P909)		022-10-7152	-CB15A(501)		022-10-7153	-DB15A(501)	

COLUMN NO. 1	CON'T. IN COLUMN NO.	SHEET NO.	COLUMN NO. 2	CON'T. IN COLUMN NO.	SHEET NO.	COLUMN NO. 3	CON'T. IN COLUMN NO.	SHEET NO.	COLUMN NO. 4	CON'T. IN COLUMN NO.	SHEET NO.
							SEE SHEET 1			SEE SHEET 1	
							SEE SHEET 1			SEE SHEET 1	
							SEE SHEET 1	AB		SEE SHEET 1	
							SEE SHEET 1	AA12		SEE SHEET 1	
							SEE SHEET 1	AA9		SEE SHEET 1	
							SEE SHEET 1	AA7		SEE SHEET 1	
							SEE SHEET 1	AA		SEE SHEET 1	
						LTR.	REVISIONS	LTR.		REVISIONS	

DIMENSIONS SHOWN (METRIC) INCH

UNLESS OTHERWISE SPECIFIED TOLERANCES: ANGULAR ± 1/2°

	INCH	METRIC
3 PLACE	± .005	---
2 PLACE	± .01	± 0.13
1 PLACE	---	± 0.25

DRAFT WHERE APPLICABLE MUST REMAIN WITHIN DIMENSIONS

DRWG. BY SAMIEC | CHK'D. BY PATEL | APP'D. BY LENZ | SCALE :

▽ = 0 ▼ = 0 REVISE ONLY ON CAD SYSTEM

TITLE
HOUSING ASSY PC TAIL
(3.96)/.156 ℄
TRIFURCON ASSEMBLY

molex MOLEX INCORPORATED
LISLE, ILL. 60532 U.S.A.

SHEET NO. 6 | DATE 03/25/91

PART NO. SEE CHART | DRWG. NO. SDA-6365

FILE NAME S6365X6

THIS DRAWING CONTAINS INFORMATION THAT IS PROPRIETARY TO MOLEX INC. AND SHOULD NOT BE USED WITHOUT WRITTEN PERMISSION.

DIV. KK | SIZE C

6365